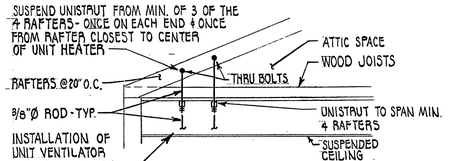

MOUNTING FOR 2ND FL. - TYP

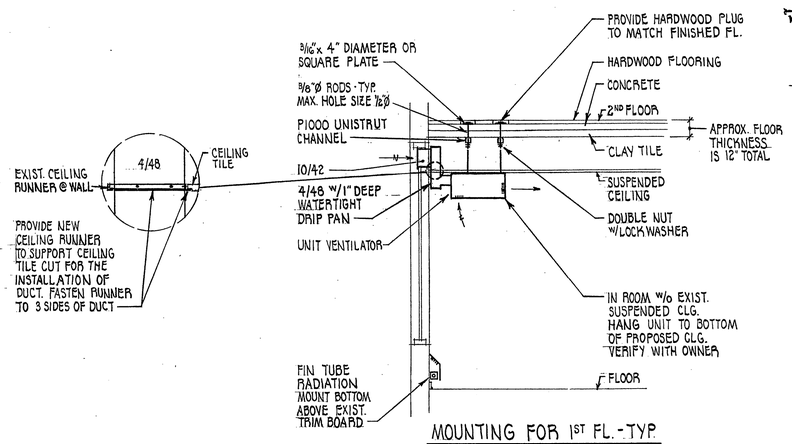

1 M4 SECTION
SCALE 1/4" = 1'-0"

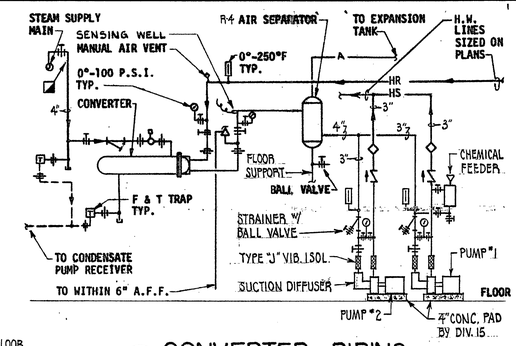

2 M4 CONVERTER PIPING
NOT TO SCALE (PHASE I ONLY)

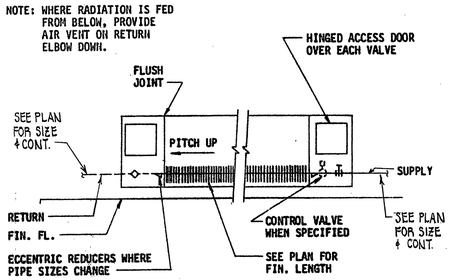

3 M4 CONVECTOR & RADIATION PIPING
NOT TO SCALE

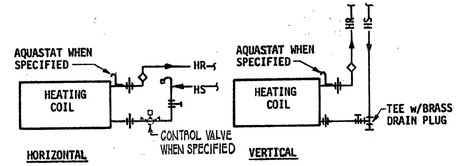

4 M4 UNIT VENTILATOR PIPING
NOT TO SCALE

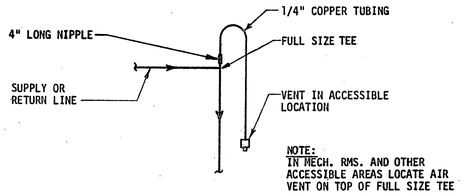

5 M4 MANUAL AIR VENT
NOT TO SCALE

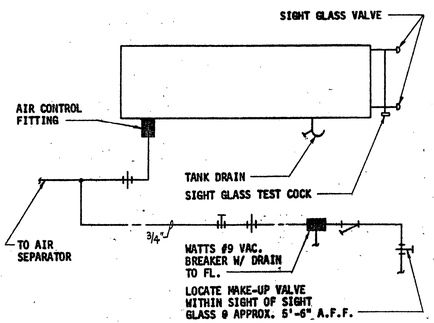

6 M4 EXPANSION TANK PIPING
NOT TO SCALE (PHASE I ONLY)

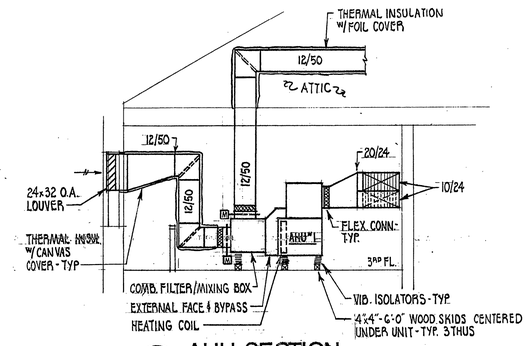

7 M4 AHU SECTION
SCALE: 1/4" = 1'-0"

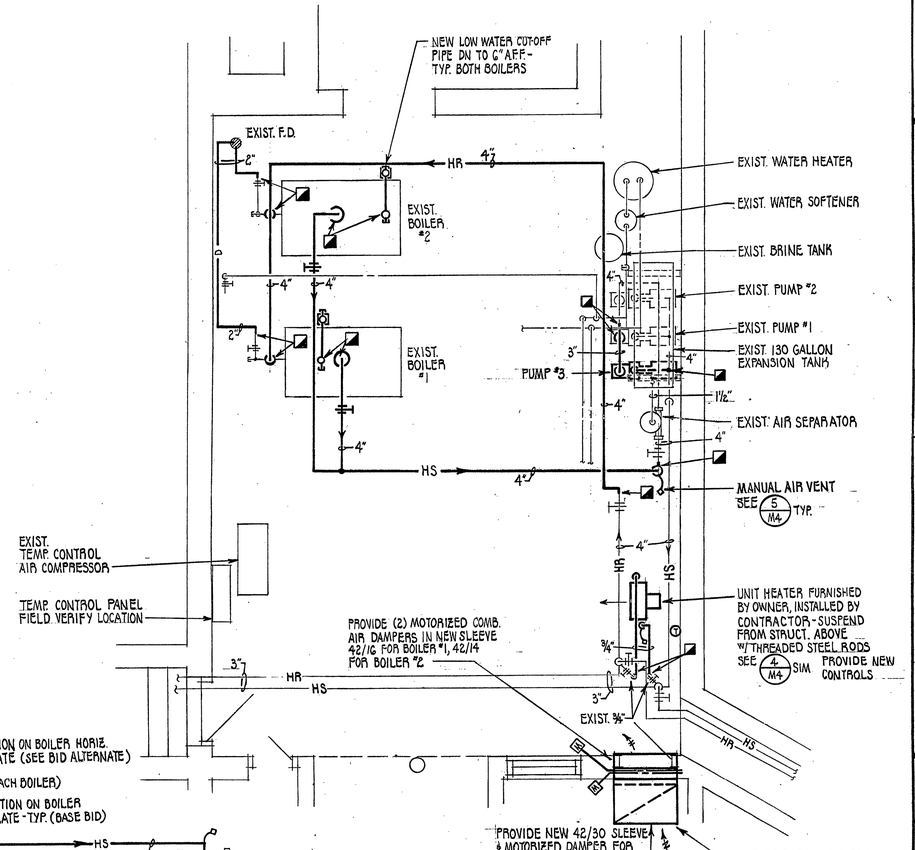

11 M4 MECHANICAL ROOM PLAN
SCALE: 1/4" = 1'-0"

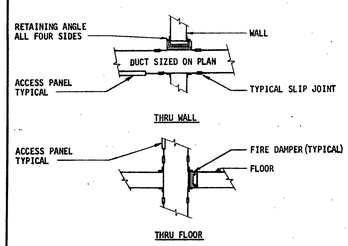

8 M4 TYPICAL FIRE DAMPER DETAILS
NOT TO SCALE

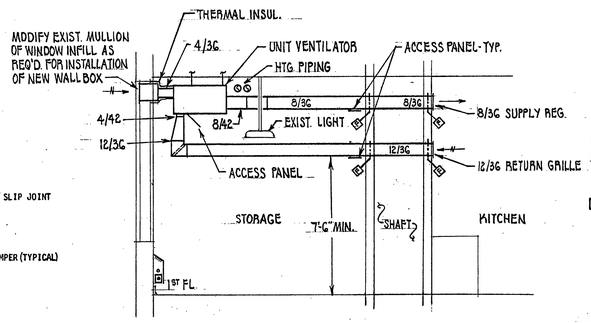

9 M4 UNIT VENT. SECTION
SCALE: 1/4" = 1'-0"

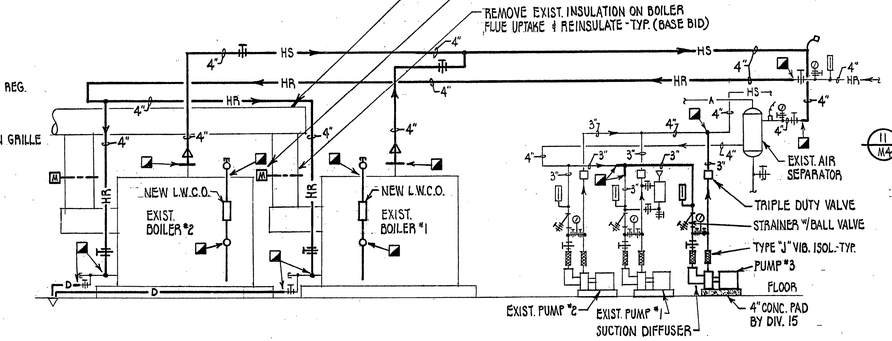

10 M4 BOILER PIPING SCHEMATIC
NOT TO SCALE

NOTE: WORK INVOLVED IN PHASE 3 CONSTRUCTION IS LIMITED TO AREA SHOWN WITHIN CLOUD UNLESS INDICATED OTHERWISE IN SPECIFICATION OR NOTES

I hereby certify that this plan, specification, or report was prepared by me or under my direct supervision and that I am a duly Registered Professional Engineer under the laws of the State of MINNESOTA

Date 1-19-88 Reg. No. 8021

KASSON ELEMENTARY SCHOOL
HEATING RENOVATION PHASE 3
KASSON, MINNESOTA

date:	1-19-88
job no.	2979.6
drawn:	M.J.S
checked:	R.H.T. D.G.R.

TSP Rochester

sheet: M4 of 4